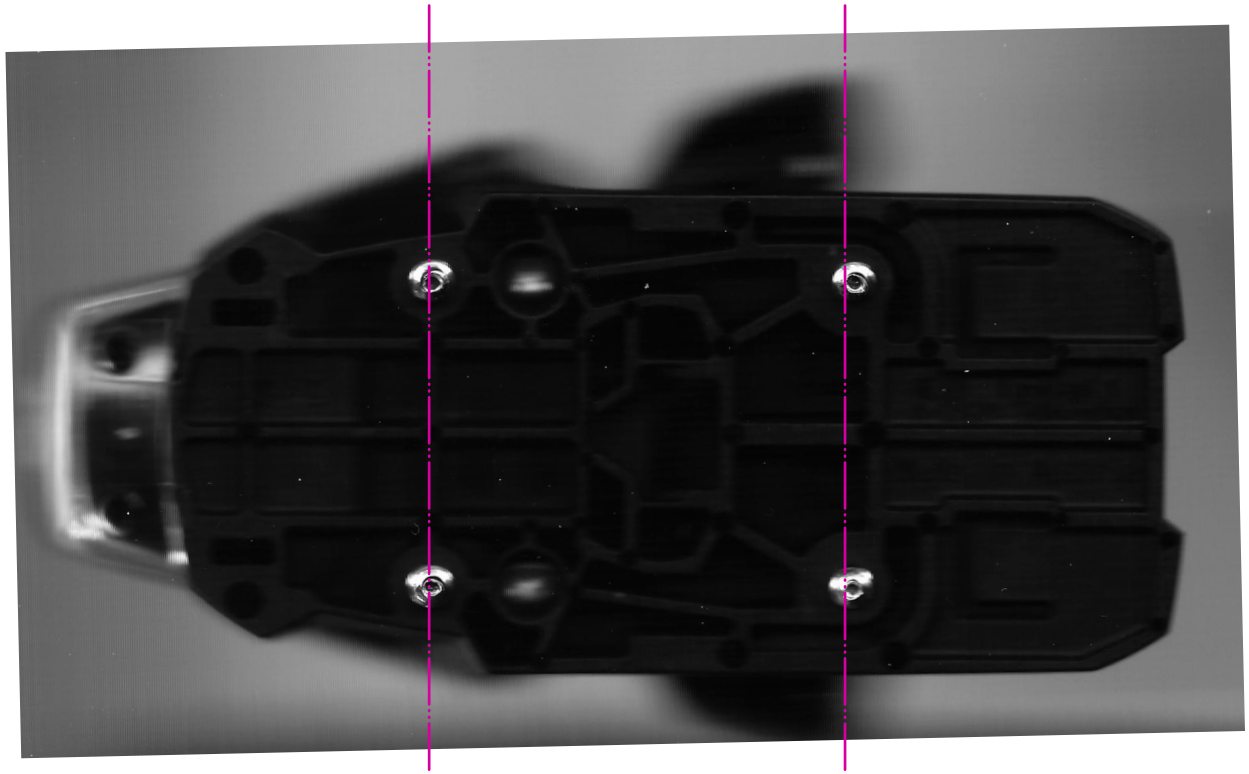

Tyrolia Toe

68.01mm

TOE

40mm

Tyrolia

55mm

SlideWright

Ski Tip

*USE ONLY AT YOUR OWN RISK

* PRACTICE A MOUNT

BOOT SOLE

240mm 250mm 260mm 270mm 280mm 290mm 300mm

(overall width)

mm

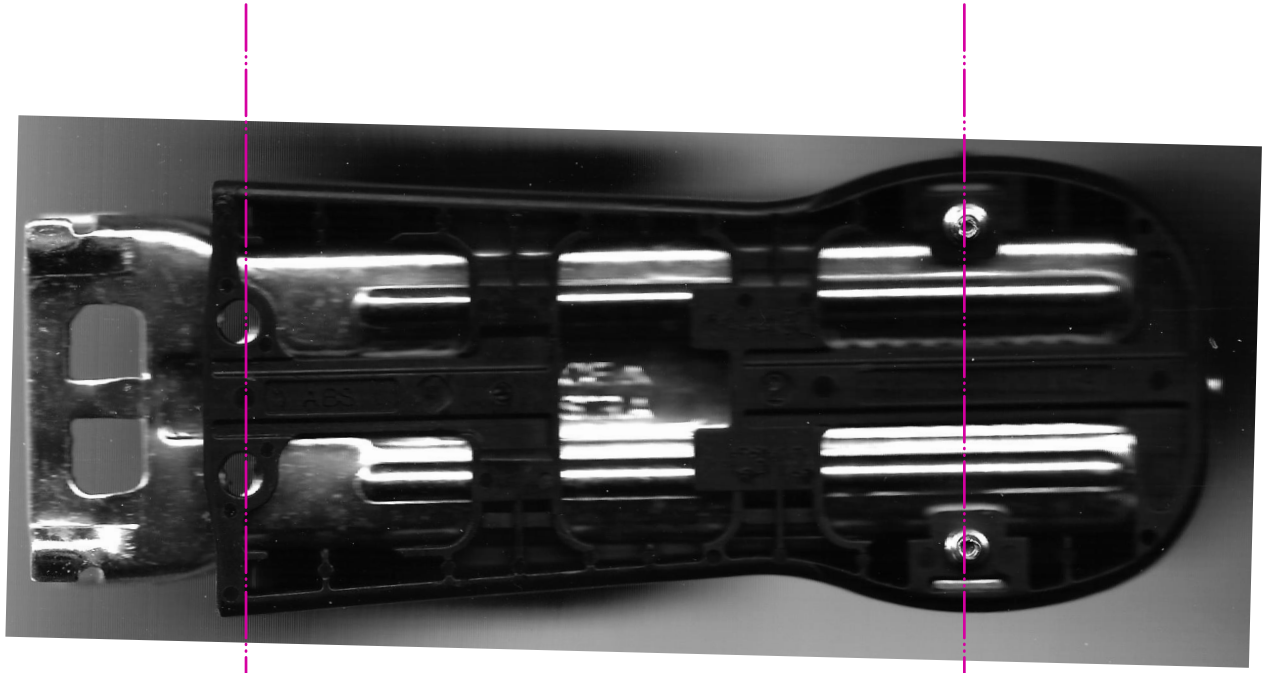

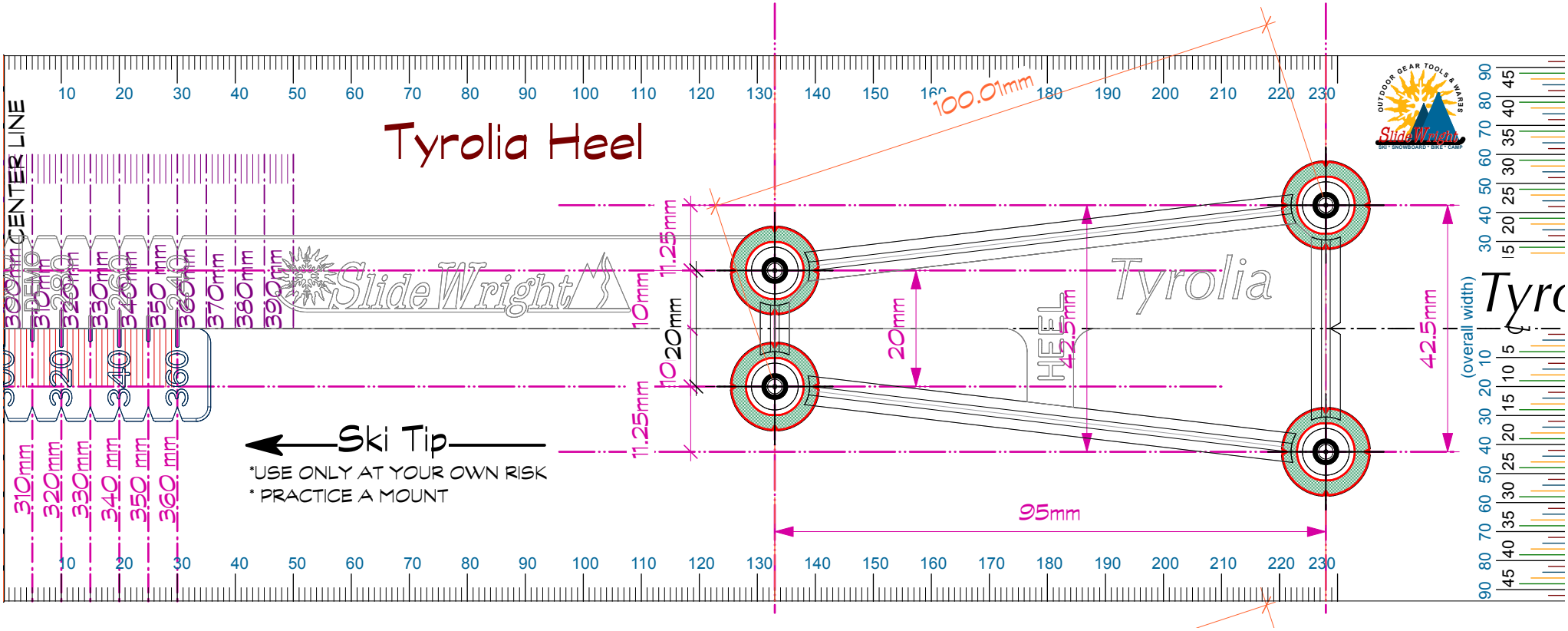
Tyrolia Heel
CENTER LINE
HEEL
SlideWright
Ski Tip
*USE ONLY AT YOUR OWN RISK
* PRACTICE A MOUNT
100.01mm
95mm
42.5mm
20mm
11.25mm
10mm
(overall width)
Tyrolia